Oiling A Citroën "D" Model

by Denis Foley
Edited by Mark L. Bardenwerper

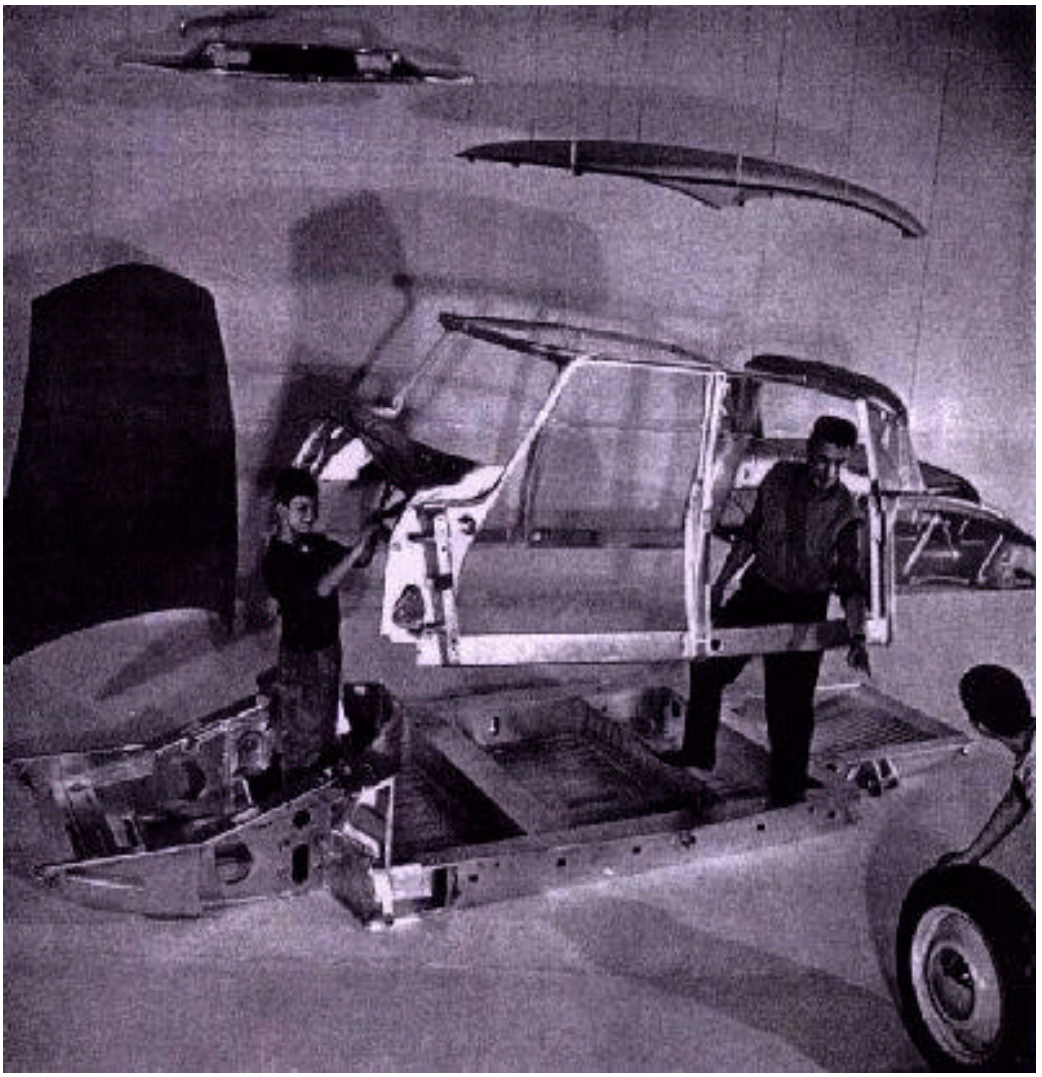

Copyright 2000 by Denis Foley ofolger@intrepid.net and Mark L. Bardenwerper, Sr. cando@smallbytes.net All rights reserved. Last Modified 02/24/00

Author's Note

The Time, Tools and Conditions Preparing the Car The Bottom

The Back End The Trunk Area Safaris (Breaks) The Frame Rails

Rear Posts **Inboard Boxed Areas** The Doors The Front End

Rustproofing, unlike what most commercial rustproofers will tell you, is an on-going process, not a one-shot deal like they might have you believe. I find that people usually fall into two categories when it comes to oiling a car. One is those people that simply don't believe it works. To those people I ask: Why do manufacturer's put oil on metal parts before they send them to be plated? Why does the military put grease

on everything that they store? The other type of person that you run into believes that oiling does some good, but he is busy trying to find out what type of oil to use and really is more interested in a new paint job or whether replacing those 180 tires with some 185's will cause his car to go wildly out of control on a rain slick curve. What they should be thinking of is the preservation of their little piece of automotive history!

Most cars, especially newer domestic ones, are really quite easy to keep oiled. A few plugs in the frame members, doors, trunk, hood, and fenders, and you are ready to get back to your football game. A CitroÎn "D" model, on the other hand, is a honeycomb of enclosed body sections and voids that don't even have factory sprayed paint on them. Combine this with salt and water and changes in temperature, and rust results. To do the job right takes more than just hitting the frame rails and doors.

The Time, Tools and Conditions

To start the job you should put a full day aside if this is the first time that you are attempting this job. As far as equipment, you will need four jack stands, an air compressor, an air blow gun, an electric drill, a 1/4" drill bit, some small rubber plugs or sheet metal screws, and a good pair of safety glasses. Two other uncommon items that I feel will make the job go easier are: a Plews liquid blow Gun and a Milwaukee Sprayer Hot Shot. Both of these items are available from W.W. Grainger or McMaster-Carr. (Or I am sure that you will be able to find a substitute in your area.) Another note: J.B.M. Industries plant number two has been known to produce special runs of an excellent extension wand that fits the end of the Hot Shot gun.

As far as what type of oil to use: anything that is fresh will do the trick. I personally prefer a mixture of 25% 30W non-detergent oil, 25% chain saw bar lube oil, and 50% K-1 kerosene. seems to atomize nicely for spraying.

Author's Note: One change that I have made since that was written about eleven years ago is the use of the commercial product: Fluid Film in place of the concoction that I had spelled out. The fluid film is far better and is a product that is specifically made for keeping the bilge's on ships from rusting in salt water applications. It is about 95% solids (it is made from lambs wool and oil) and therefore it does not evaporate like the petroleum products. I service the Citroens for a living, and all of my regular customers get this treatment, and it seems to do the trick. I know we don't get the snow and salt that you get up there, but I do keep my winter time truck, and the wives winter vehicle lathered up in this stuff, and it really does keep things from rusting. The main thing that you have to understand is it is an on going fight, not just a one time job.
One further point that I must add is that you want a fully dry car that hasn't seen rain in at least three or four days.

Preparing the Car

First, take out your spare tire. Then, put your car up on jack stands and take off all four wheels. Next remove all four fenders. (Front fender removal was covered in Vol. 4 #2, page 8 of CitroÎn Quarterly for those of you who may never have taken off your front fenders.) After this you want to remove all four gravel shields. Next, take off the frame covers, and finally go into your trunk and remove your rear anti-sway bar cover.

I have to say that about 75% of all the boxed sections of the "D" model have holes and plugs so that you can spray inside of them; the remaining 25% are very important to drill out, oil up, and plug back up with either small rubber plugs (available at your local hardware store) or sheetmetal screws of the appropriate size. I feel that the best way to explain this process is by the use of these lettered line drawings with the appropriate numbers corresponding to the steps in the article.

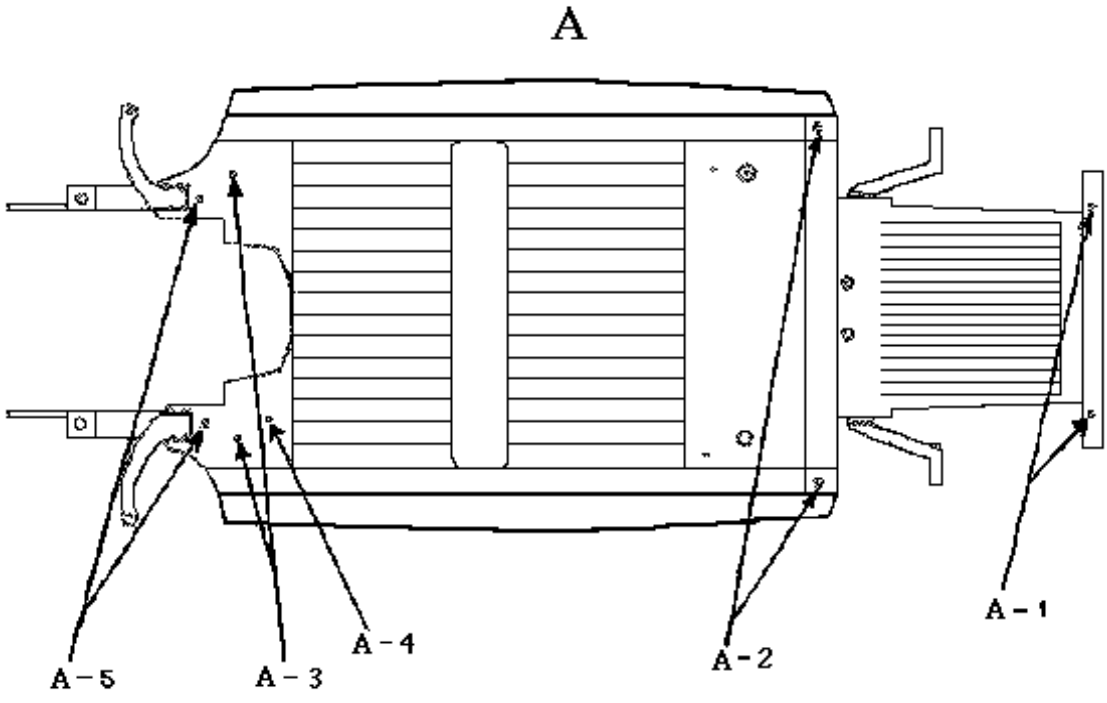

The Bottom

Once you have the car up on stands and stripped down get yourself familiar with the underside of the car (A). As you will notice, there are quite a few rubber plugs; in general, the large diameter ones are for drainage. The smaller diameter ones are to be removed to allow you to spray oil up into the boxed sections. Then replace the plugs. I suggest that you start at the middle tail end of the car and work your way out and up. This way you get the least amount of oil on you.

In review, you should find oiling plugs at:

- (A-1) the back bumper frame member (on the Safari wagon);
- (A-2) the back part of the side frame members;
- (A-3) the front footwell box;
- (A-4) the hydraulic brake box

(NOTE: the brake box on some models is lubricated from inside the car).

For this next step you will have to pull out your electric drill because there is a closed boxed section that does not have a hole for oiling, but it should not be forgotten. (A-5) is located next to the footwells and is where the frame horns intersect with the passenger compartment. Drill, oil, and plug up. This should take care of the bottom of the car, but if You find more plugs, just fill-'em with oil!!

The Back End

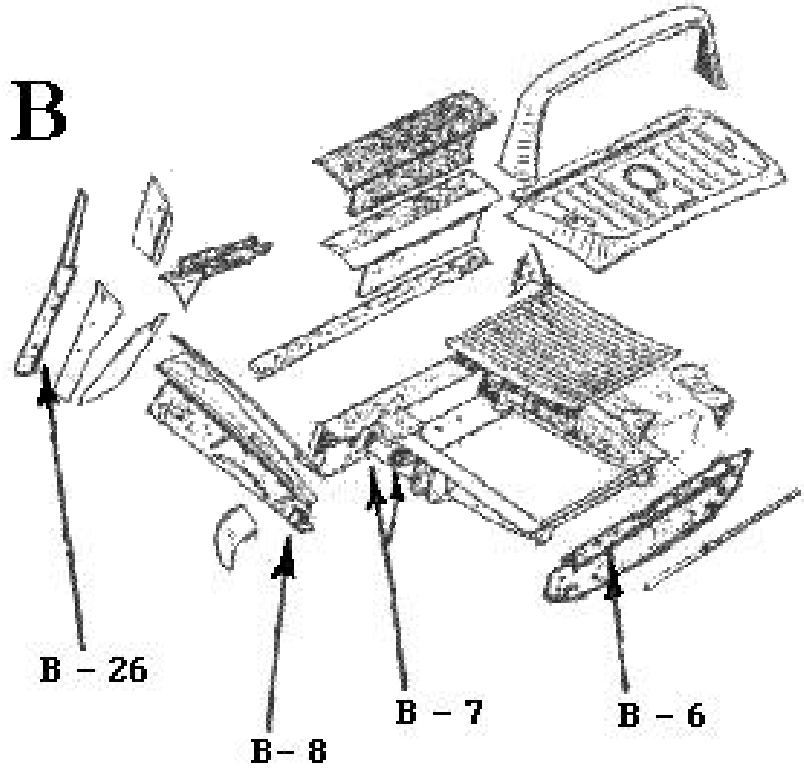

Let's move to the back end of the car because this is the area with the largest amount of critical closed areas that should be drilled, oiled, and plugged up. I have shown several angles of the rear sections of both the sedan and safari, hoping to simplify things. Starting with the sedan in (B, C, and D). The top trailing edge of the trunk (B-6), where the trunk lid catches, is an area that is prone to rusting. Drill four 1/4" holes along the top edge, spray oil, and plug up. Next, starting on the left side at (B-7) drill out the upper and lower suspension stops. At (B-8) drill out the bumper bracket holders and repeat the oiling and plugging procedure. While working on the suspension stops you will also note at (C-9) the rubber plug above the suspension cylinder and at (C-9) the hole in the side of the suspension cylinder holder. With an air gun blow the dirt and crud out from around the cylinder through hole (C-10). At (C-9) take out the plug and shoot some oil in, then return the plug to its hole. Move around to the right side of the car and, again using the air blow gun, clean out the area at (C-1l) between the fuel tank filler neck and the trunk wall. Next, follow the fuel filler neck down to where it goes into the frame at (C-12). Shoot oil into the fuel tank bulk head, and then using some sealing methods like fiber-glass or some sort of gasket, seal off where the filler neck goes into its bulkhead. The reason for this: water rolls down this filler neck right into this box and rusts out the bottom causing your fuel tank to eventually take a plunge for the pavement and your car to fold in half.

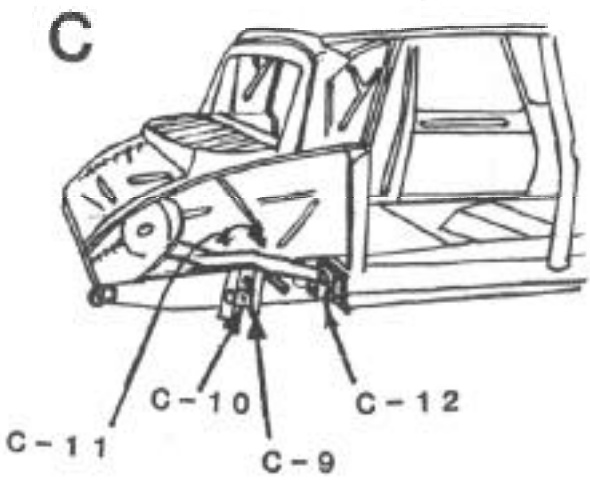

Now, while the rear fenders (E) are off, lie them down on an incline and spray or pour some oil on the inside top frontal seam (E-13) where rust is prone because of the capillary action of this type of seam.

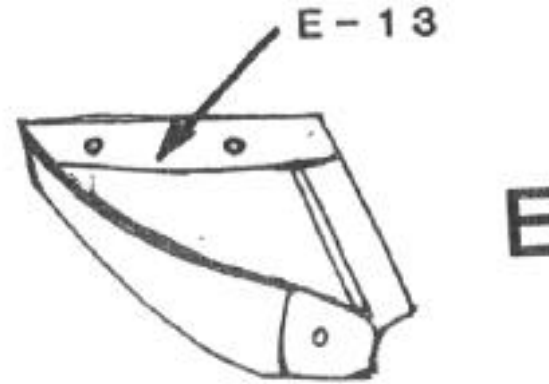

The Trunk Area

Moving inside to the sedan's trunk (D) you will find that the floor slants down toward the gas tank. When the trunk leaks, as most eventually do, the water rolls toward the fuel tank bulkhead and is held in the cracked up tar soundproofing and foam backing of the carpeting. All this adds up to rust. My advice is to get yourself another spare weekend, to make sure that your trunk gasket is in good sealing shape. Then take out the floor mat in the bottom of the trunk and scrape off all loose tar sound deadening material. Next take care of the rusty areas with one of the many excellent rust treatments. Then cover with a mixture of 20% Penetrol and 80% Rustoleum. Let this dry for several days; you will find the Penetrol slows the drying process, but the finish is worth it.

Now, back to the oiling project at hand. At the front of the trunk (D) you will notice at (D-14) the two boxed sections that hold the rear axle pivot arm bearings. Either drill a hole into these boxes, oil them, and plug them, or shoot oil through the 5 mm captive nuts that hold down the anti-sway bar cover. One way or the other you will get oil into these box sections. Now, one other thought while you have your head in the trunk. Through measurement you can drill through the inside walls of the trunk, getting to the upper and lower suspension stops and the suspension cylinder box allowing you to oil them from inside the trunk. The only other place on the back section of the car that you want to keep lightly oiled, especially if you are going to keep the car parked outside, is the area by the trunk hinges and rain gutter. (D-15) is an area that gets punky on cars, and often a nasty putty job can be found here when looking at that previously owned car.

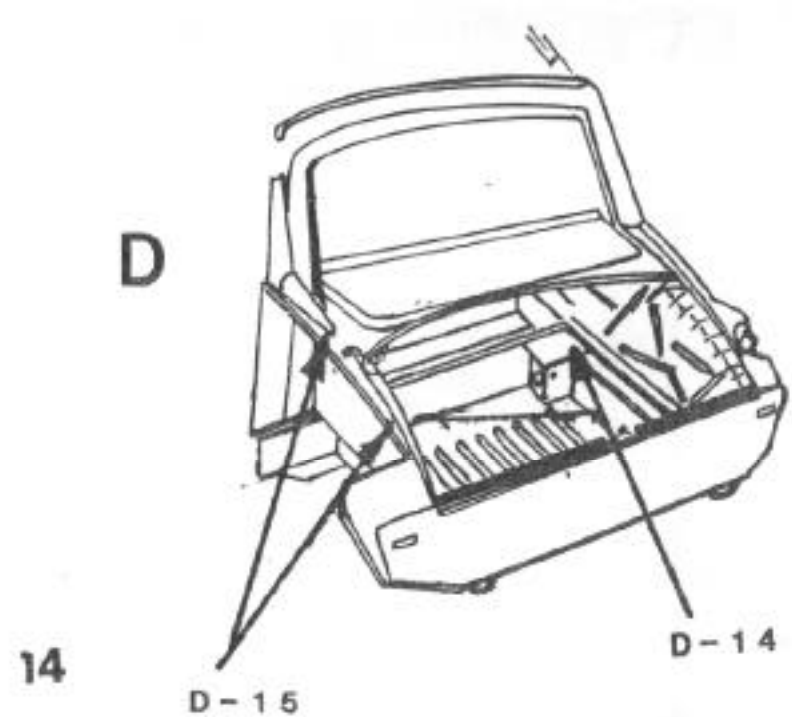

Safaris (Breaks)

The rear end of the Safari (F,G,H, and I) is a little different animal. The rear of the wagon is prone to rust at the base of the side windows inside the car. This is an indication that the outside fender liner, which is of double wall construction with a rust collecting reinforcing edge, has possibly rusted though. The tailgate and rear hatch are also rust problems. So what to do? First, since the rear fenders are off, you have a chance to check the inner fender for general softness, especially around that reinforcing ledge (1-16). This will then be something to come back to on another weekend to cut out and replace. If you don't have a problem here your car probably spent most of its life in Arizona, and you won't have any rust on the inside.

Starting on the inside right of the car drill three holes at (F-17) under the window and spray oil, then plug up. Move back to just below where the hatch stay is welded to the body (F-18) and drill a hole, spray, and plug. Now do the same on the left side of the car. Since you have already oiled the back bumper beam, the two rubber plugs at (A-l) are also shown in (F-19) along with the rear bumper brackets, which should also be oiled

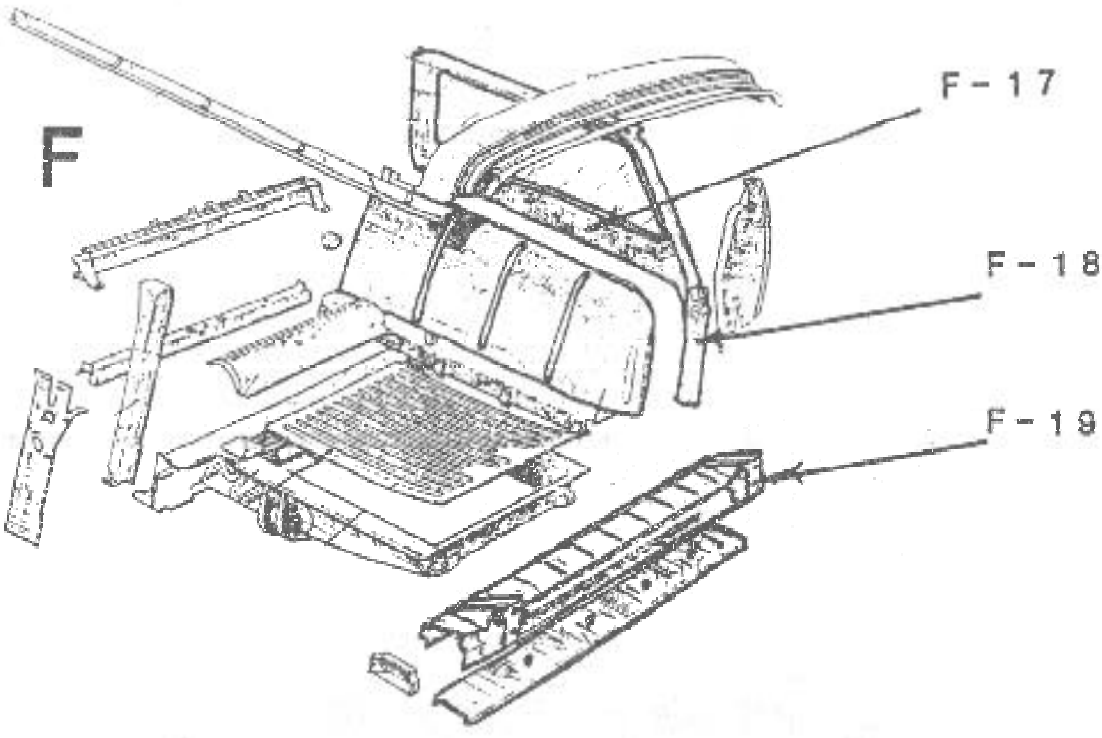

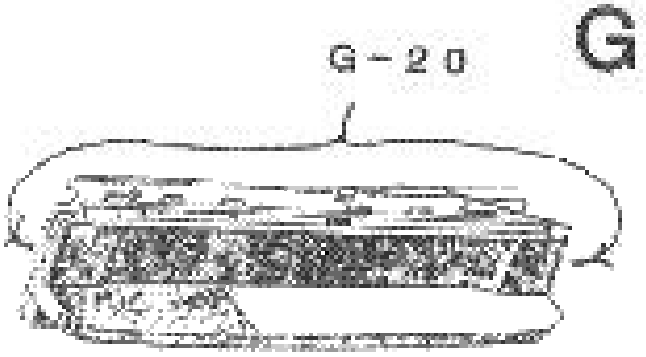

Now, it is time to move onto the tailgate (G) Drill two holes on each side at (G-20), oil and plug up. Move up to the hatch (H). Pull the four rubber plugs out (H-21), oil and return the plugs. Now, lightly spray oil on the outside of the car below the side windows where the body meets the inner fender liner (1-22). This area is prone to separation from the body causing moisture entrapment and rust. Keep an eye on it!

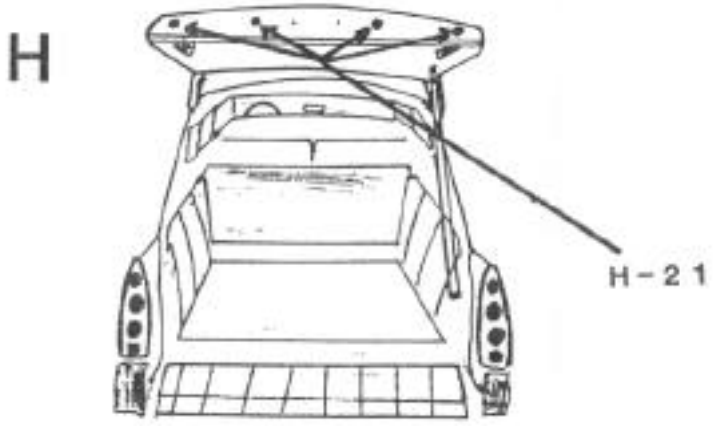

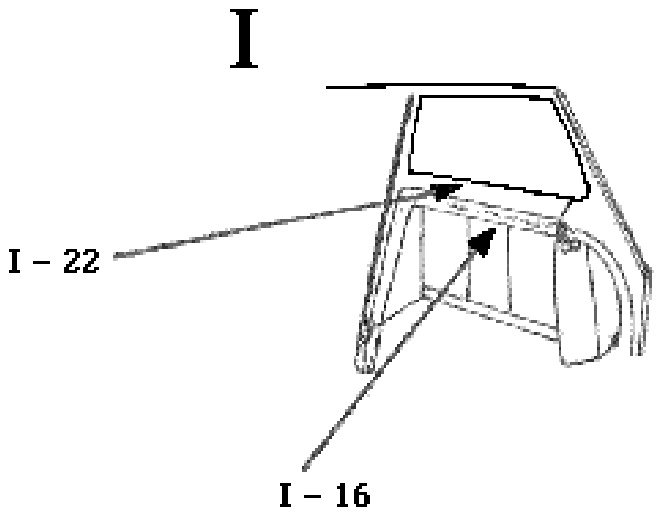

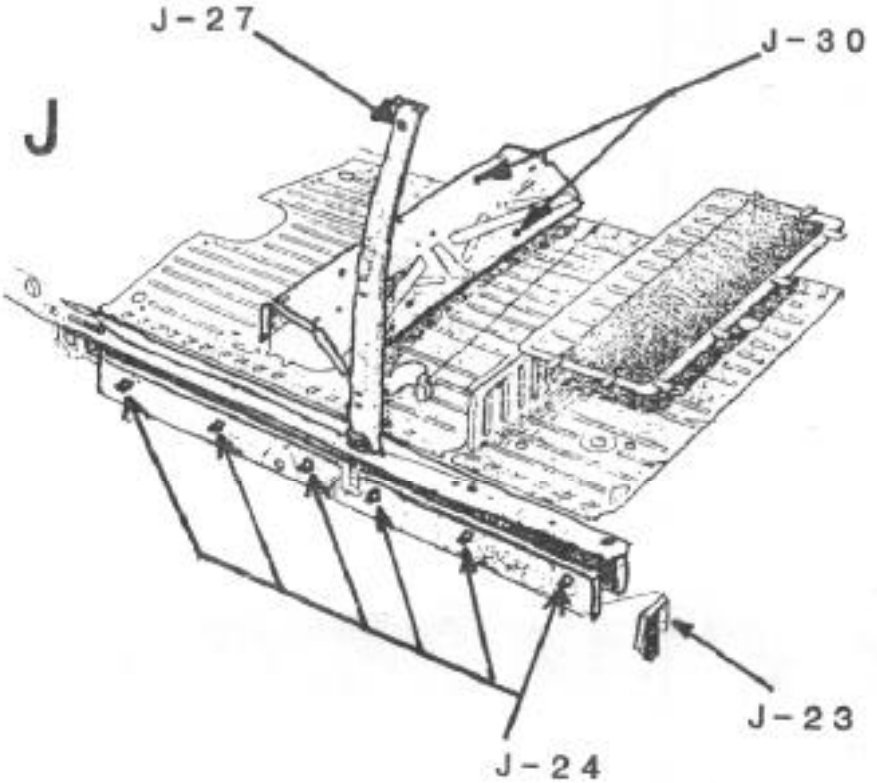

The Frame Rails

Now we move to the frame rails (J). There are three areas to spray on them. (J-23) is a rubber plug on the back end of the frame rail next to where the high pressure lines come through on the left side of the car. On the right side of the car it is next to the fuel filler neck and the low pressure return lines. Now, if you shoot oil into these holes under pressure you should see it misting out of the next holes I want you to shoot into. (J-24) are tabs that have been cut and folded to support the frame rail covers on all but the Pallas models, and they serve as a good access to get into the. frame rails. So start at the back and work your way toward the front of the car. Repeat the same thing on the other side of the car. In the front of the frame shoot through the hole at (K-25) where the hydraulics go through on the left side of the car, and where the return and fuel lines come through on the right side of the car.

Rear Posts

Now move up to the rear door posts (B-26). You can either drill, oil, and plug, or take out one of the bolts holding a rear fender mounting peg, oil, and then replace the bolt. On the "b" post (J-27) either take out the bolt holding the grab strap on the Pallas model, or take off the outside decorative molding. Either way you will expose a good hole for spraying oil into. The front "a" post (K-28) has two rubber plugs that can be removed. Another access hole to this area is through the removal of the door light switch.

Inboard Boxed Areas

Now, moving inside the car pull up on the rear seat cushion, and take it out of the car. You will expose two more holes at (J-29) where the seat cushion is held that will give you access to the side frame rails. At this point take out the carpeting and it's foam backing so that you can get at the next area to oil. One of the most

rust harboring places in the floor is the seat box, an enclosed area that holds the front seats, and in cars built after 1962, houses the muffler. Problems occur here because of the constant heating and cooling of this area causing moisture condensation, plus this is an unpainted area of the car and it rusts. So peel back the carpeting and backing on this area and drill four holes (J-30), fill with oil, and plug up.

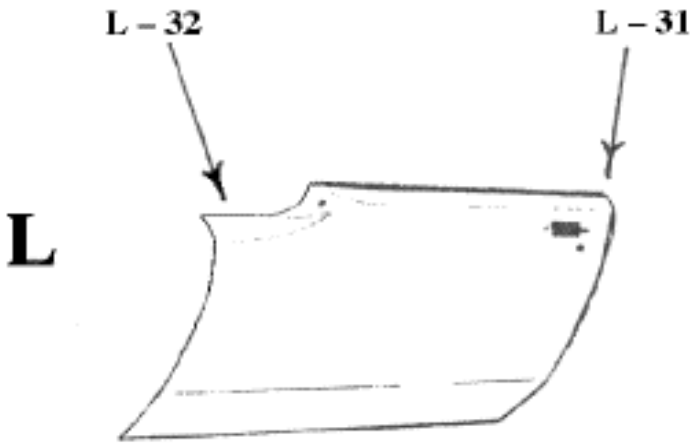

The Doors

Spraying the doors is next. Here you want to get oil inside, but you don't want to mess up the inside door panel. First make sure that the three drain holes in the bottom of each door are unclogged. Those oval and round rubber plugs in the edges of the doors look inviting, but they won't aid in spaying the door. Starting with the rear door, open the door, and make sure the window is up. Put your spray nozzle at the back edge of the door between the glass and the outside rubber weather strip (L-31). Start spraying, moving the spray nozzle from spraying at the front to the back of the door. Moving up to the front door do the same thing plus pull the plug out at the front inside edge of the door (L-32), and spray in there. Now go back and make sure that oil is coming out the bottom drain holes. Repeat the same thing on the other side of the car. If you have a Pallas consider taking off the stainless kick panels, drill some holes in the door, oil, plug, and replace the panel. Another point on the Pallas is the bimetal reaction between the stainless steel side door moldings and the door around the molding's mounting holes. Either keep after the rust or replace the molding with an adhesive backed variety available at local auto parts stores or through J. C. Whitney.

The Front End

Move to the front end of the car (K). Always try to keep the area clean around the hood hinges (K-33), and keep this area covered with a light coating of oil. This is much like the trunk hinge area in that it has a tendency to rot on cars left outside. Now move to the front frame horns. You will find two holes on each side to spray oil in. The one that is inside the fender well at (K-34) should have a rubber plug in it. Take it out, oil, and replace the plug. The next hole to oil at (K-35) is about one foot ahead of this last one, and does not have a. plug in it.

Now make sure that the triangular body section at the front of the frame horn has a functional drain hole in it and that some previous owner didn't Bondo it over. Spray this area (K-36) with oil, and then think about that person you met last year who was going to sell you that set of late model air conditioning condenser coils to fit down in that spot.

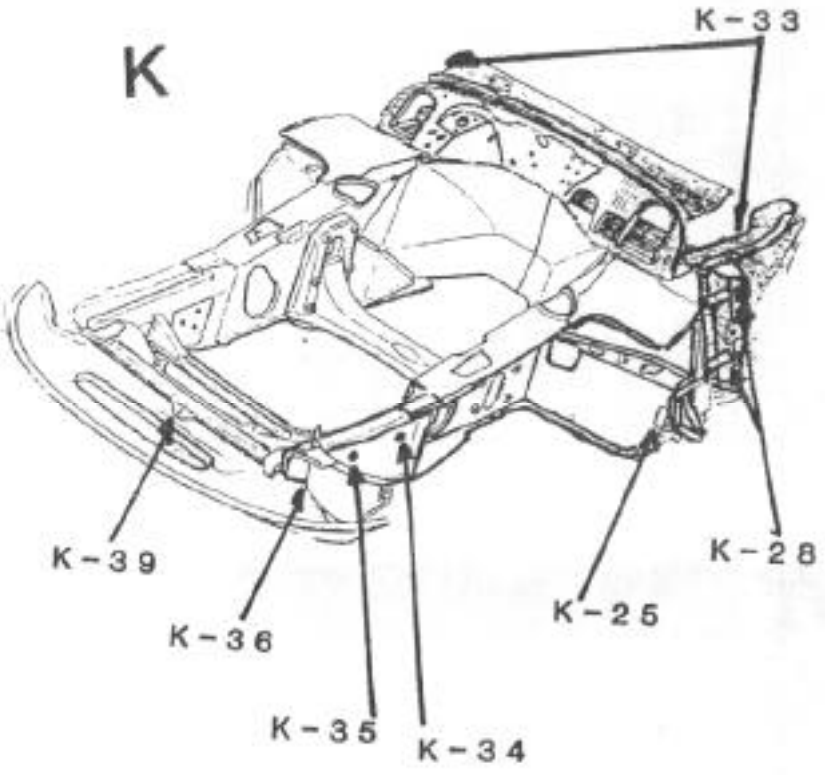

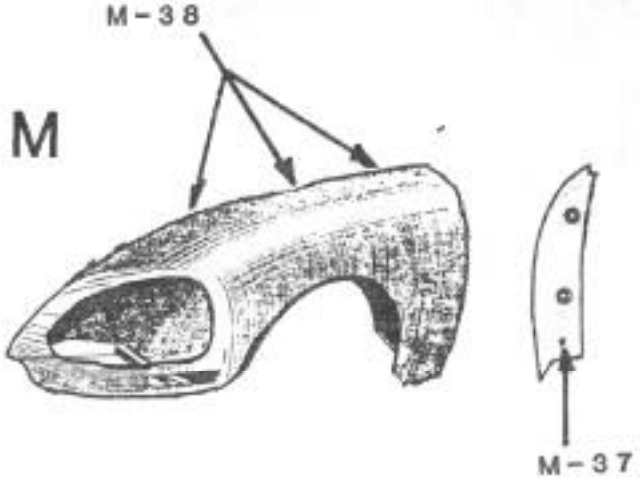

Spray the front fenders (M) through the small hole on the back edge side (M-37) just below the lower rubber horn mount. Spray inside the fender to get some oil where the inner fender meets the outside fender (M-38). This is a very bad place for rust once the fender liner splits and starts to pull away from the outer fender.

Finally, just give a light spaying to the front frame members (K-39) and the shelf where the spare tire sits. Now, reassemble the car and park it in a place that won't be hazardous to the nation's ground water supply. And if there is anything left of your weekend, you can go do something constructive like finding that proper stick-on cat for one of your side windows.